Demodulation of FM Signal

Two steps involved in FM demodulation

- Conversion of FM signal into AM signal, Tank or parallel resonance circuit converts FM into AM signal.
- An envelope detector is used to extract modulating signal from modulated signal.

Slope Demodulator:

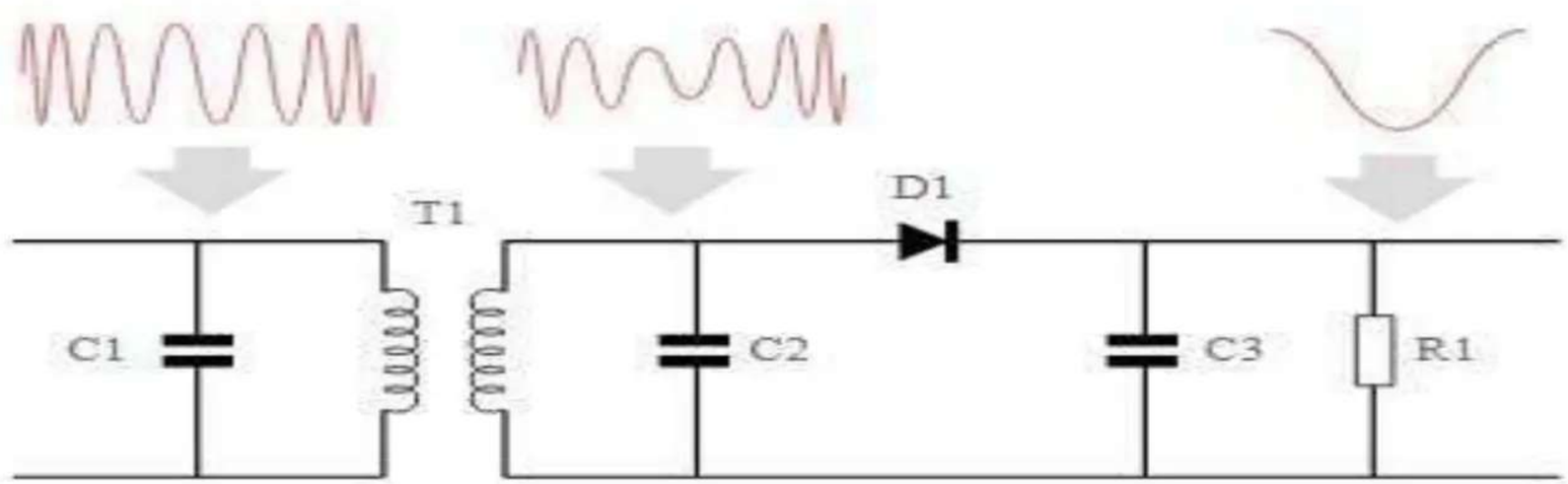

FM slope detector circuit showing the signal waveforms

Demodulation of FM Signal

- The input signal is a frequency modulated signal. It is applied to the tuned transformer (T1, C1, C2 combination) which converts the incoming FM signal into AM.
- This AM signal is applied to a simple diode detector circuit, D1. Here the diode provides the rectification, while C3 removes any unwanted high frequency components, and R1 provides a load.

Advantages:

Simple and low cost

Enables FM to be detected without any additional circuitry.

Disadvantages:

Nonlinear operation

Both frequency and amplitude variations are demodulated and this means that much higher levels of noise and interference are experienced.

Demodulation of FM Signal

Foster Seeley Demodulator or detector:

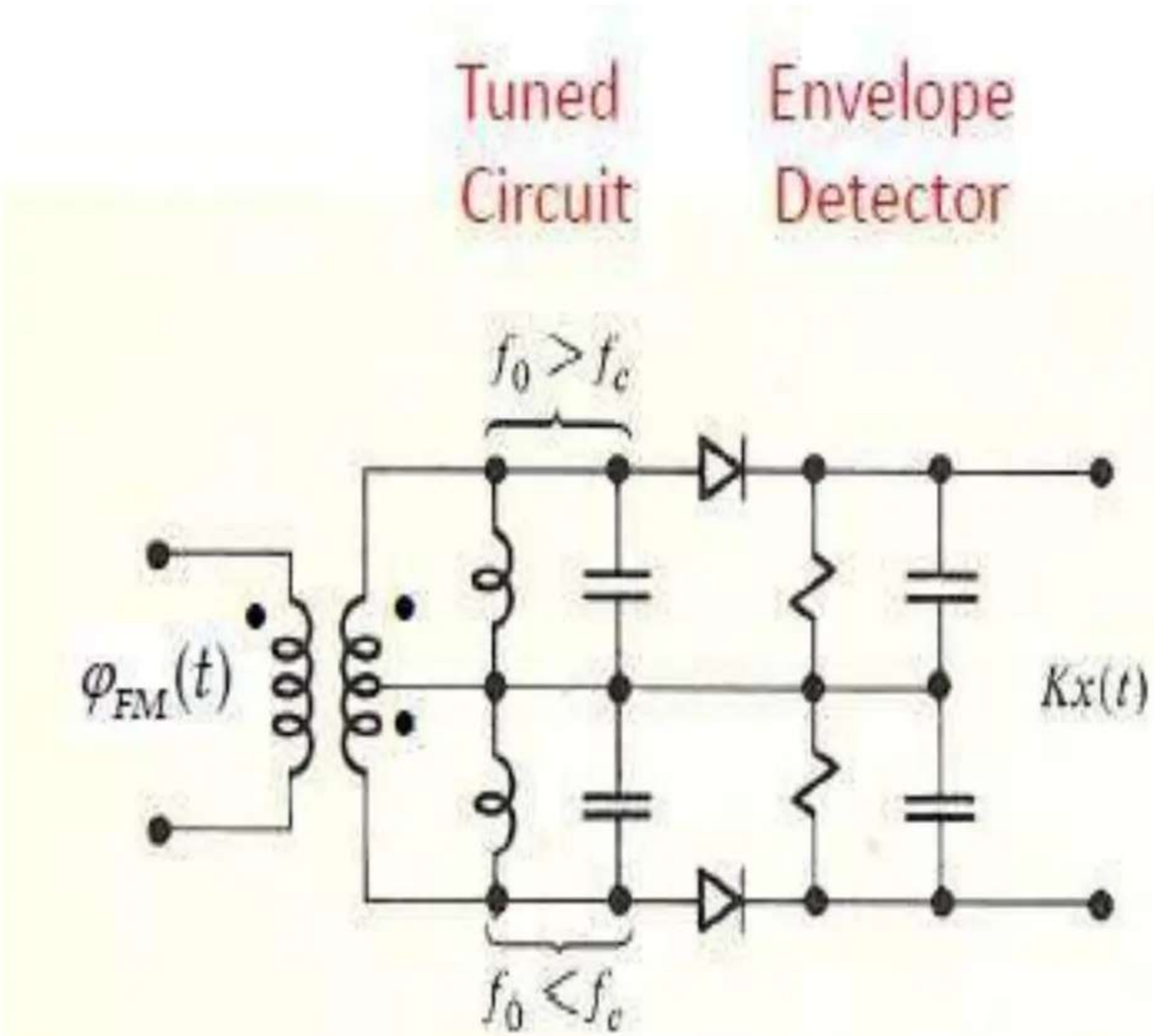

(a)

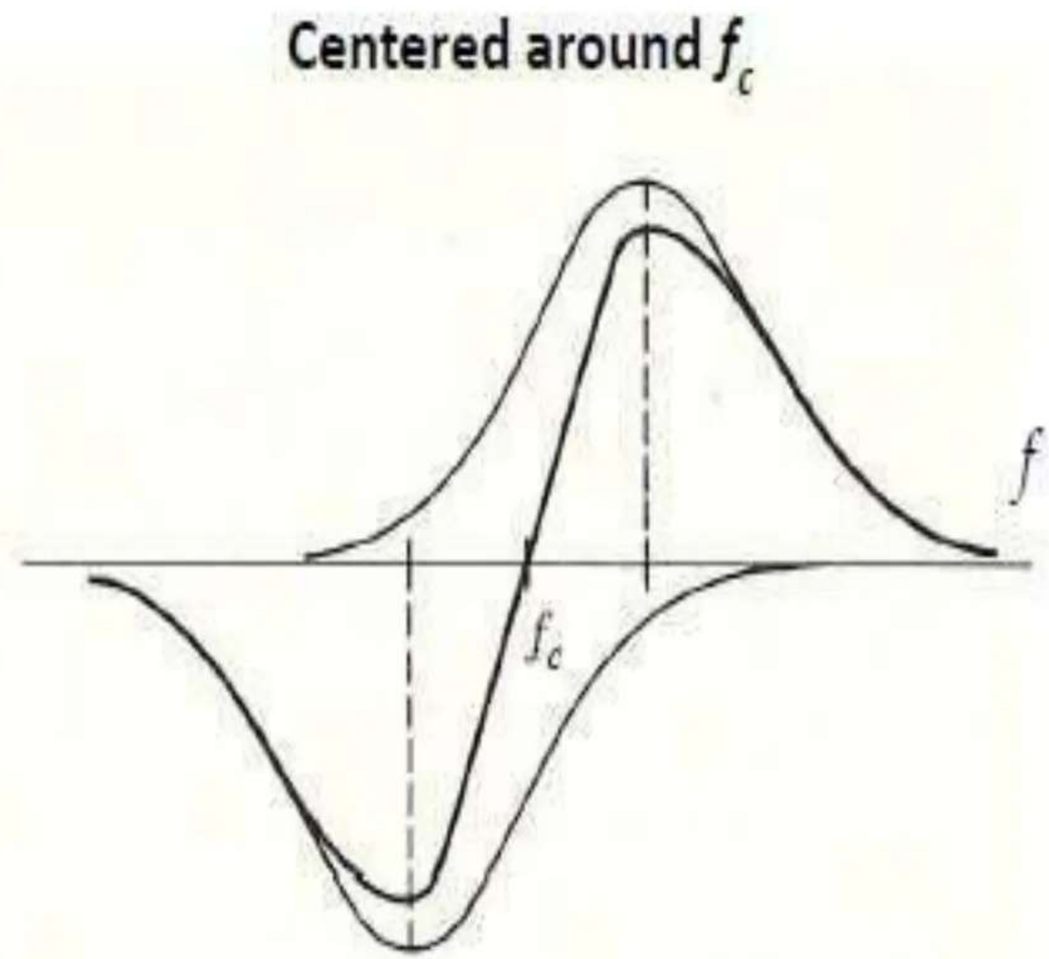

(b)

Transfer Characteristics

Demodulation of FM Signal

- Foster seeley demodulator contains two tuning circuits and two envelope detectors.

- One section of tuning circuit and envelope detector works for incoming frequency is greater than carrier frequency and vice versa for incoming frequency less than carrier frequency.

- Tuning circuit converts FM signal to AM signal and Envelope detector extracts message signal from AM signal.

Demodulation of FM Signal

Ratio Demodulator:

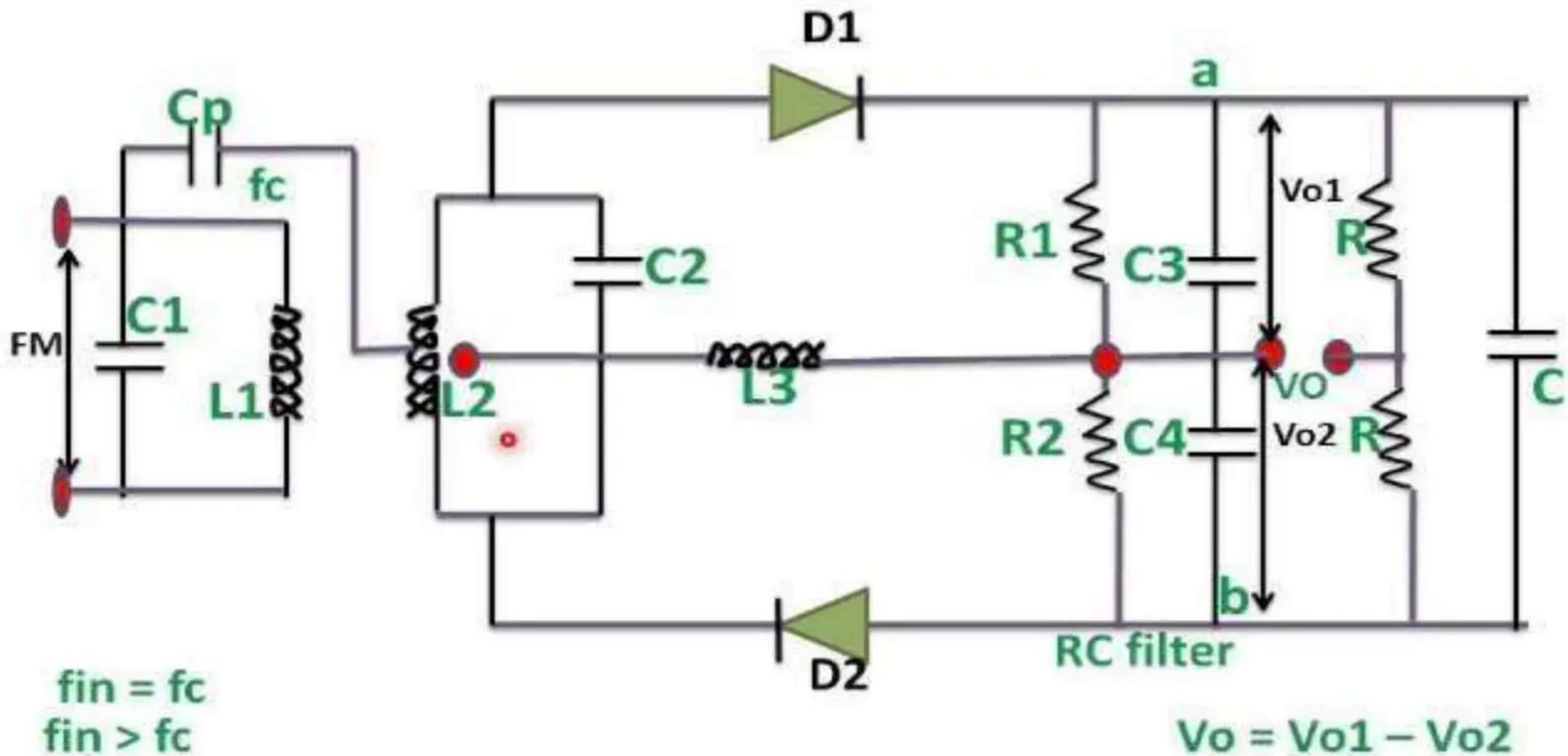

- Ratio detector is similar to Foster seeley demodulator except of Diode of D2 is reversed potential divider circuit.
- Potential divider circuit suppress the noise and this advantage of ratio detector.

Demodulation of FM Signal

PLL Demodulator or detector:

•Phase Locked Loop is closed loop system which contains Phase detector, VCO and loop filter or LPF as shown in figure.

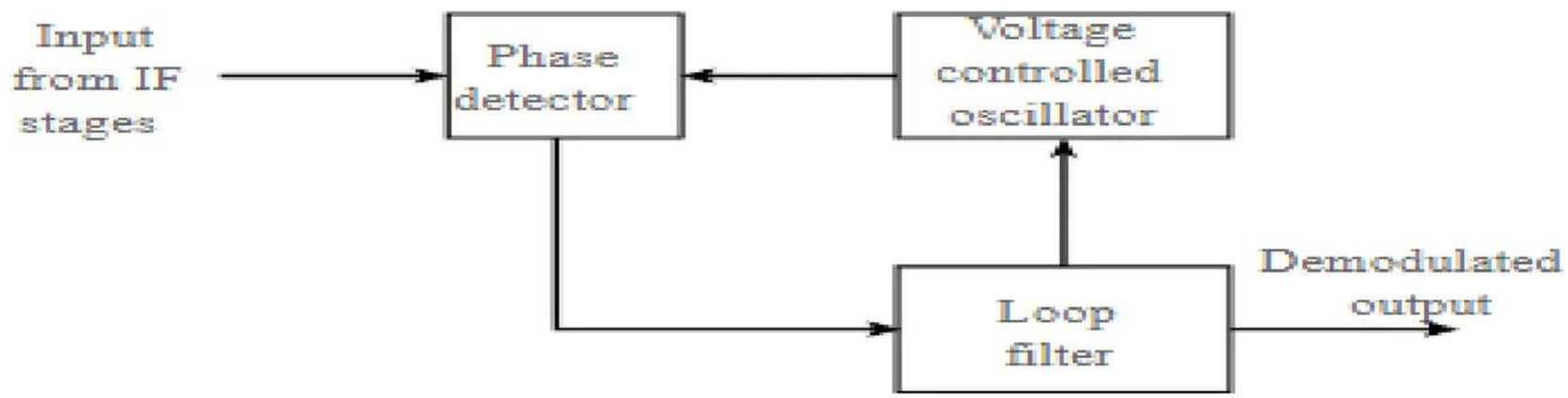

PLL Phase locked Loop FM demodulator

•It continuously finds the phase difference between incoming FM signal and locally generated carrier.

•And based on Phase difference it generates Modulating signal.

Demodulation of FM Signal

Zero Crossing Demodulator or detector:

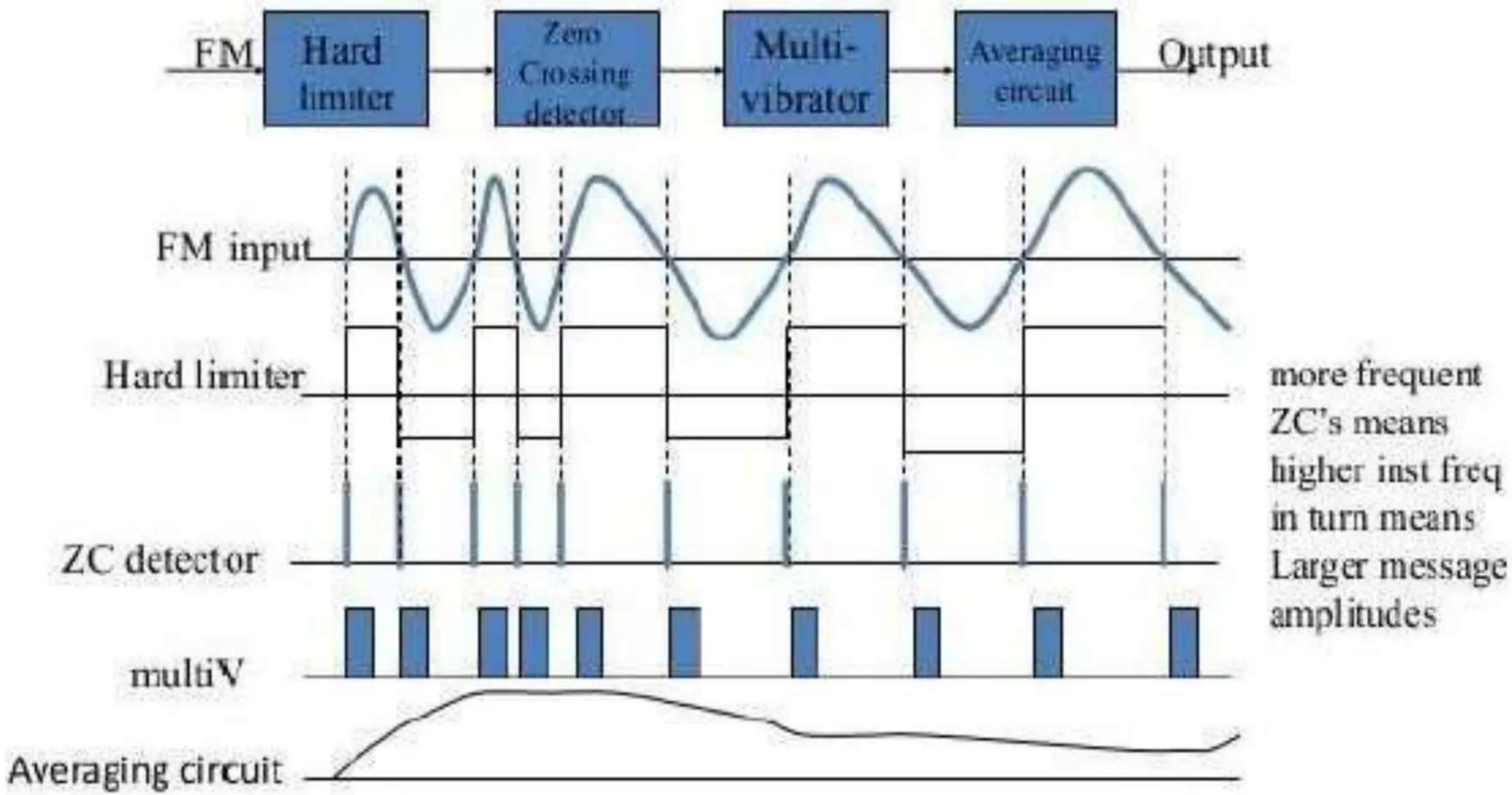

Demodulation of FM Signal

- Zero crossing detector contains hard limiter, Zero crossing detector, Multi vibrator, and Averaging Circuit.

- Hard limiter is two sided independent clipper which converts continuous FM signal into Digital.

- Zero crossing detector is differentiator which generates spikes when signal crosses zero and no. of zero crossings is proportional to modulating signal amplitude.

- Mono stable multivibrator is generates pulses with constant amplitude and width for each spike.

- Averaging is LPF circuit which integrates pulses and generates modulating signal.

Super Heterodyne FM Receiver

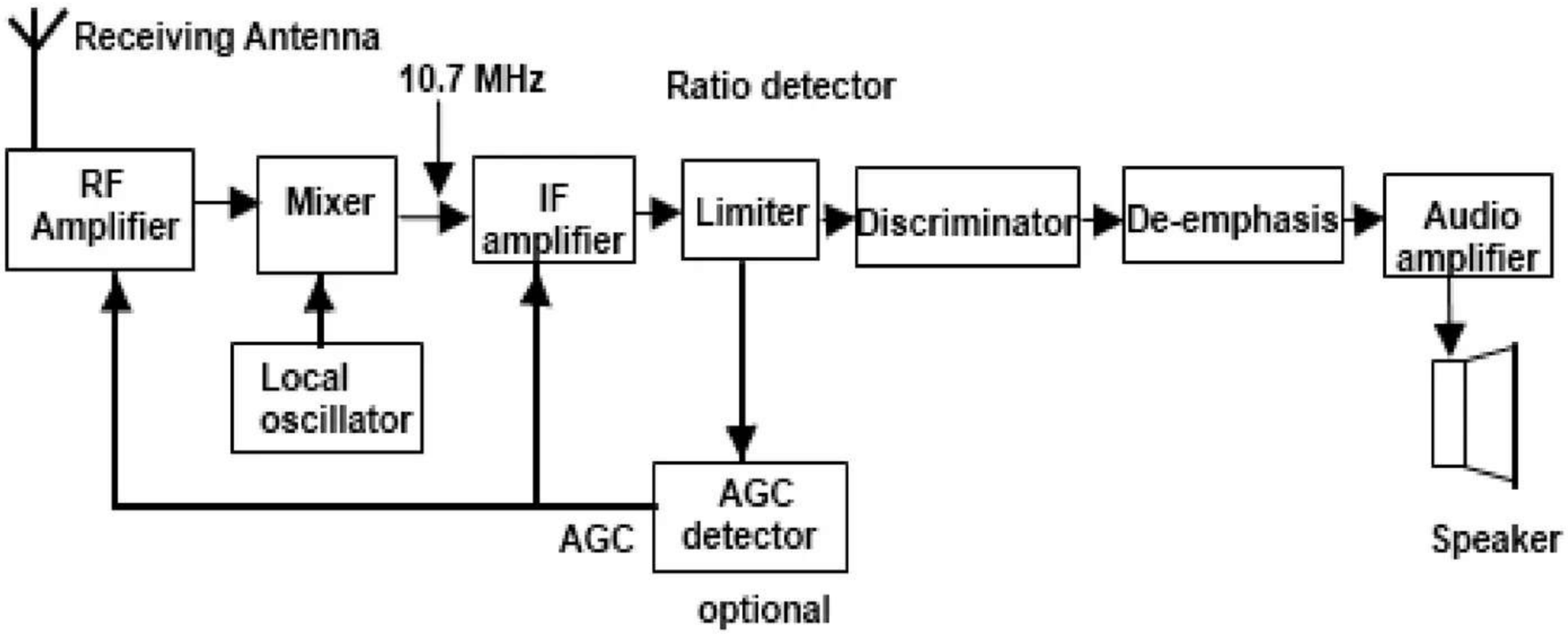

Antenna: It is passive device which converts electromagnetic signal into electrical signal.

RF Tuned Amplifier:

It is broad band amplifier which contain tuning circuit and amplifier.

Tuning circuit designed to select 100 stations and amplifier provides amplification for 20MHz or20 000 KHzband width.

RF tuned amplifier is responsible for sensitivity, selectivity, Image signal rejection and noise reduction.

Super Heterodyne FM Receiver

Mixer: It is combination of frequency mixer and Band Pass Filter (BPF).

Frequency generates sum and difference frequency of incoming signal and locally generated signal.

BPF selects difference frequency at the output whose center frequency is equal to = 10.7MHz.

Local Oscillator:

It is either Colpits or Hartley oscillator.

It generates carrier frequency 10.7MHz.greater than the incoming carrier frequency to produce constant or fixed frequency.

IF Amplifier:

It is narrow band, high gain and fixed frequency amplifier which provides amplification for 20 MHz band width at center frequency of 10.7 MHz.

Super Heterodyne FM Receiver

Limiter:

It is combination of hard limiter and BPF.

Hard limiter is two sided independent clipper removes the noise spikes.

Detector or Demodulator or Discriminator:

It is frequency translator circuit which extracts modulating signal from FM signal.

De-emphasis:

It is LPF which attenuates frequencies of Audio signal from 2 KHz to 20 KHz to get the original modulating signal.

Audio Amplifier:

It is low frequency amplifier which provides amplification at (20-20K) Hz.

Loud Speaker:

It converts Electrical signal into sound or audio signal.

Frequency Division Multiplexing

Allocation of different frequency bands or carrier frequency to different channel is called “Frequency Division Multiplexing”. And it is used to transmit Radio & TV signals.

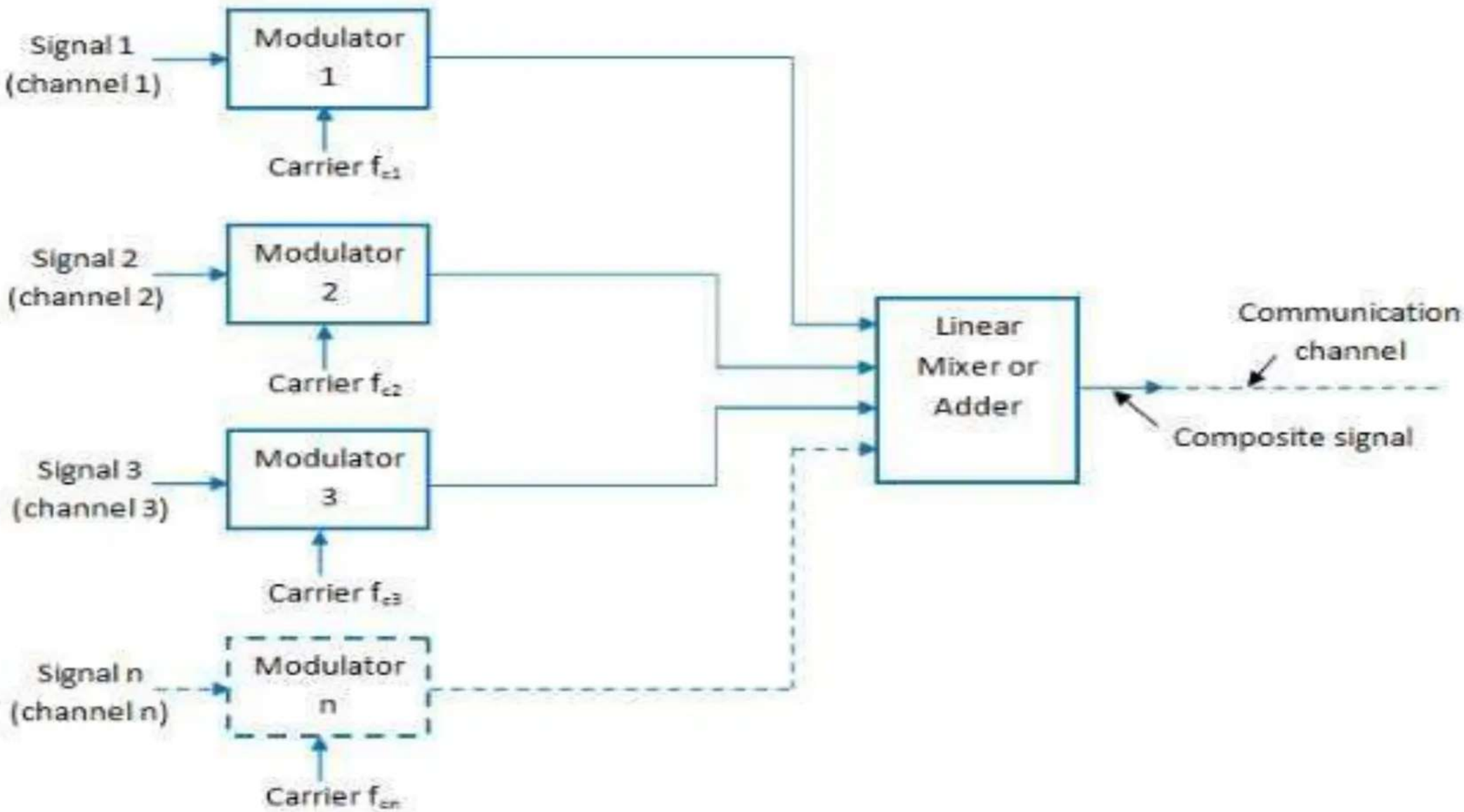

Frequency Division Multiplexing

FDM Multiplexing:

- Different carrier frequencies are used for different stations or channels.
- Modulator is used in the transmitter

Band width of FDM system,

$$BW_{FDM} = N.\ BW_{CH} + (N-1)\ BW_G$$

Where, N = No. of channels or stations

BW_{CH}= Bandwidth of each channel

BW_G= Bandwidth of guard band

Guard band is frequency gap between two channels

Frequency Division Multiplexing

FDM De-Multiplexing:
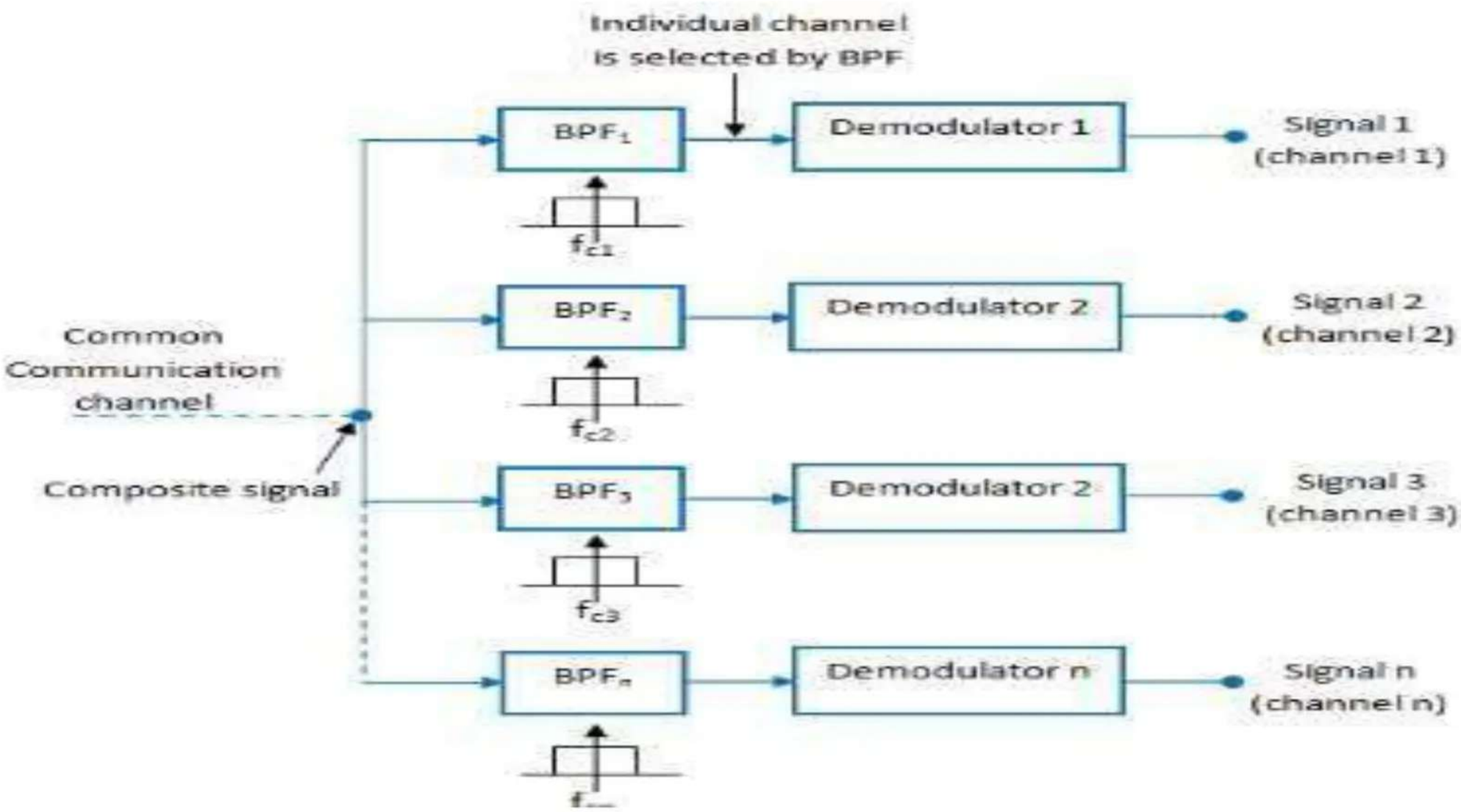
- BPF filter is used select channels or stations
- Demodulator is used in the receiver.